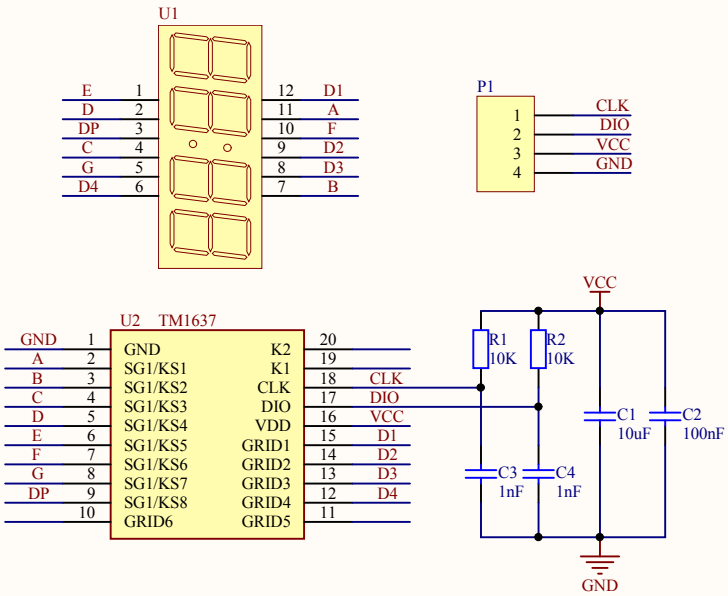
U1
E 1
D 2
DP 3
C 4
G 5
D4 6
12 D1
11 A
10 F
9 D2
8 D3
7 B
P1
1 CLK
2 DIO
3 VCC
4 GND
U2 TM1637
GND 1
A 2
B 3
C 4
D 5
E 6
F 7
G 8
DP 9
10
GND
SG1/KS1
SG1/KS2
SG1/KS3
SG1/KS4
SG1/KS5
SG1/KS6
SG1/KS7
SG1/KS8
GRID6
K2
K1
CLK
DIO
VDD
GRID1
GRID2
GRID3
GRID4
GRID5
20
19
18 CLK
17 DIO
16 VCC
15 D1
14 D2
13 D3
12 D4
11
VCC
R1 10K
R2 10K
C1 10uF
C2 100nF
C3 1nF
C4 1nF
GND